GLYPH-S3 | **ESP32S3 DEV KIT**

WIFI/BLE/ZIGBEE | **SUPPORT**

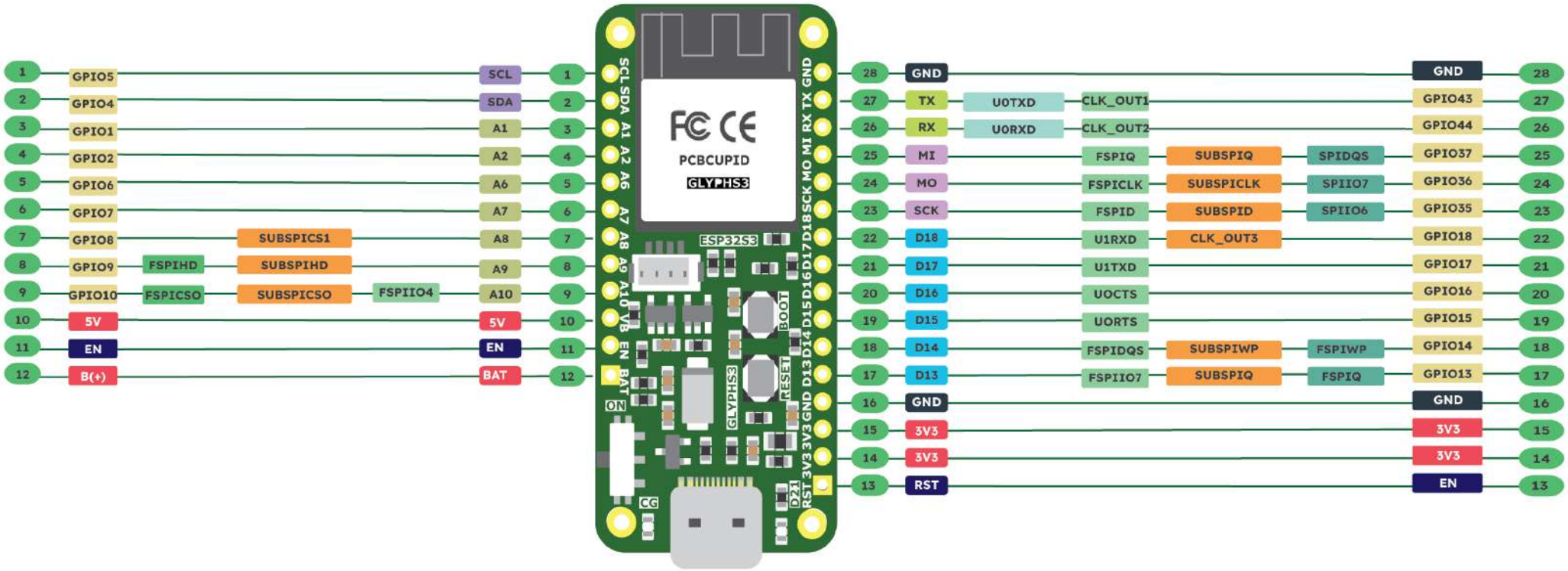

POSITIVE SUPPLY	GROUND	NO CONNECTION	ENABLE/RESET
PHYSICAL PINS	GPIO PINS	DIGITAL PINS	ANALOG PINS
USB PINS	UART PINS	I2C PINS	SPI PINS

BUY FROM | **SHOP.PCBCUPID.COM**

LEARN.PCBCUPID.COM | **INFO**